DWG. NO. SH11294 REV 1

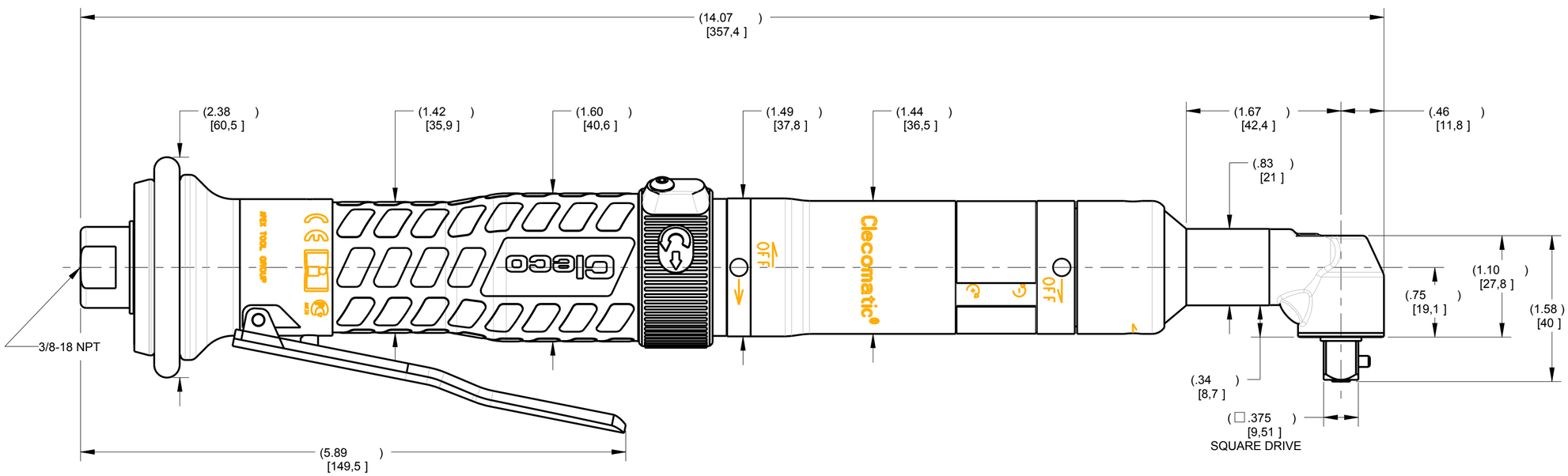

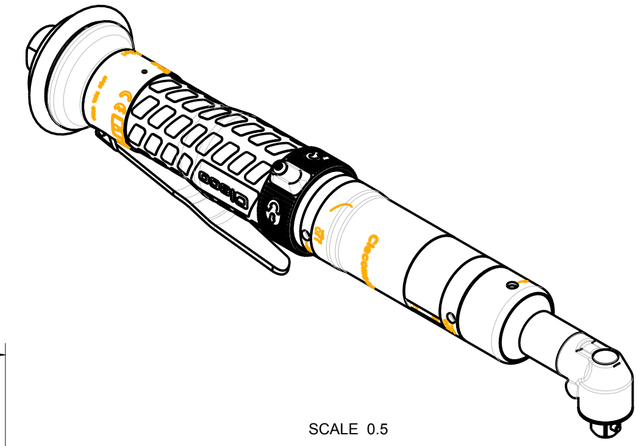

SCALE 0.5

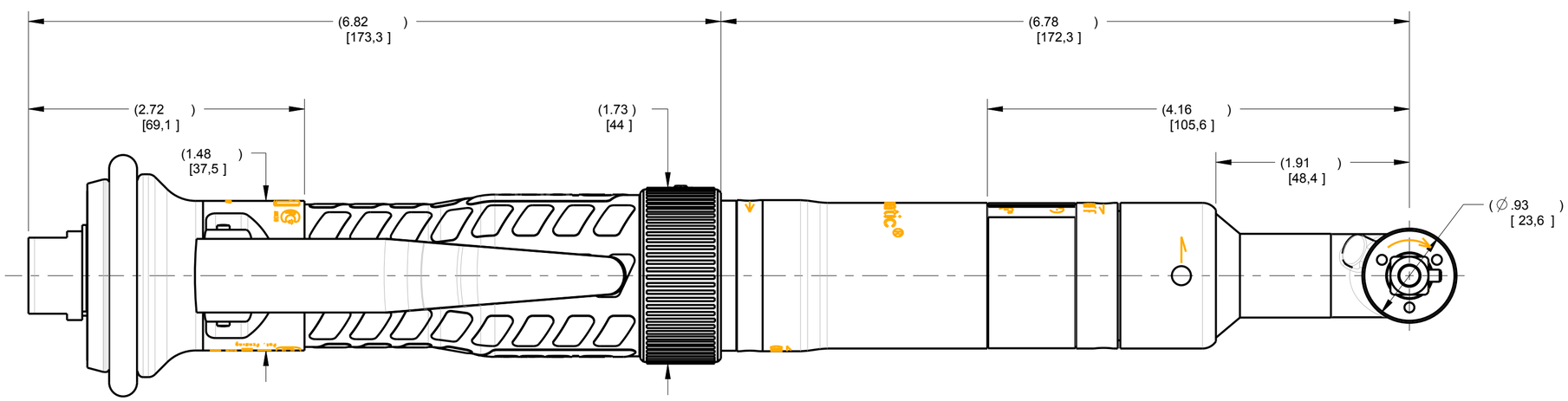

NOTE:
PRIMARY DIMENSIONS ARE IN INCHES

SECONDARY DIMENSIONS IN BRACKETS [ ]
ARE METRIC AND ARE REFERENCE ONLY

UNLESS OTHERWISE SPECIFIED: TWO PLACE DECIMALS ± .01, THREE PLACE DECIMALS ± .005, FOUR PLACE DECIMALS ± .0005
125 MACHINE SURFACES. GEOMETRIC SYMBOLS PER ANSI Y14.5, MACHINE FILLETS .015 MAX, BREAK SHARP EDGES .015 MAX
ANGULAR SURFACES TO BE TRUE WITHIN ± 1°, FEATURES ON COMMON ℄ TO BE CONCENTRIC WITHIN .010 TOTAL

ZONE	REV	REVISION	DATE	BY

APEX TOOL GROUP

MATERIAL: ASSEMBLY		DESCRIPTION: 24RAA11AL3		
HEAT TREAT: N/A		OUTLINE DRAWING		
HARDNESS: N/A		NUTRUNNER		
FINISH: N/A		DRAWN BY: BGD	DATE: 8/28/15	ENG APP: B. DOWLING	DATE: 8/28/15
SIMILAR TO	SCALE: 1.000	DWG SIZE: C	SHEET: 1 OF 1	REV. DATE	REV: 1
PART NO.: 24RAA11AL3		DRAWING NO.: SH11294		

This document contains confidential and trade secret information which is the property of Apex Tool Group and receipt or possession does not convey any rights to loan, sell, or otherwise disclose said information. Reproduction or use of said information for any purpose other than that in connection with which said information was supplied may not be made without express written permissions of Apex Tool Group. This document is to be returned to Apex Tool Group upon request and in all events upon completion of the purpose for which it is loaned.